# PROJECT 48: Design and Analysis of Voltage Controlled Oscillator by using Cadence Virtuoso

A Comprehensive Study of Analog Circuits

By: Priya Chaudhary, Astitva Johri and
Bhavya Solanki

**Chapters:**

List of Figures……..…… 3

1. Introduction …….. 4
2. Brief Description…… 5
3. Circuit Design……. 6-7
   3.1 Schematic Design……... 6
   3.2 Simulation Setup..…….. 6
   3.3 Transient Response…..……..……..….. 6
4. Simulation Results…….. 8
5. Advantages and Disadvantages…….. 9
   5.1 Advantages……. 9
   5.2 Disadvantages……. 9
6. Conclusion…….. 10
7. Frequently Asked Questions (FAQs)…….. 11

# LIST OF FIGURES

Figure 3.1 Circuit of Voltage Controlled Oscillator……7

Figure 4.1 Simulation Results of Voltage Controlled Oscillator……..8

# 1. INTRODUCTION

A Voltage-Controlled Oscillator (VCO) is a crucial component in modern electronic systems, particularly in communication systems, phase-locked loops (PLLs), and signal processing applications. It plays a pivotal role in frequency synthesis, modulation, and clock generation. Unlike fixed-frequency oscillators, a VCO allows the frequency of oscillation to be dynamically adjusted based on a control voltage, making it highly versatile for various applications.

The fundamental principle behind a VCO is its ability to convert an input voltage into a corresponding output frequency. The frequency of oscillation depends on circuit elements such as capacitors, inductors, or active components like transistors. The two most common types of VCOs are LC-tank oscillators and ring oscillators. LC-VCOs provide superior phase noise performance, making them suitable for high-frequency applications, while ring oscillators offer compact design and ease of integration.

In Cadence Virtuoso, the design and analysis of a VCO involve several crucial steps, including schematic design, layout implementation, simulation, and verification. These processes ensure that the designed VCO meets the desired performance parameters such as frequency range, phase noise, tuning sensitivity, and power consumption. By leveraging Cadence Virtuoso's powerful simulation tools, designers can optimize the circuit to achieve high stability and low noise performance.

## 2. BRIEF DESCRIPTION

A Voltage-Controlled Oscillator (VCO) is an electronic oscillator where the frequency of oscillation is controlled by an applied input voltage. This variation in frequency is achieved by altering the circuit's reactive components such as capacitors and inductors or by adjusting transistor biasing conditions.

There are two main categories of VCOs:

1. **LC-Tank Oscillator:** Utilizes an inductor (L) and capacitor (C) to form a resonant circuit. The oscillation frequency is determined by the LC combination, and the frequency can be tuned by varying capacitance (varactors) or inductance. LC-VCOs are widely used in RF and microwave applications due to their low phase noise.
2. **Ring Oscillator:** Consists of a series of inverters connected in a feedback loop. The delay of each inverter stage determines the oscillation frequency. Ring oscillators are easier to integrate into ICs and have a higher tuning range, but they suffer from higher phase noise compared to LC oscillators.

Using Cadence Virtuoso, engineers can simulate and fine-tune VCO performance before fabrication, reducing design iterations and enhancing efficiency. By leveraging advanced simulation techniques, such as Monte Carlo analysis and corner simulations, designers can evaluate the impact of variations and optimize circuit robustness.

# 3. CIRCUIT DESIGN

## 3.1 Schematic Design

1. Open Cadence Virtuoso and create a new cell for the VCO design.
2. Use the **Schematic Editor** to place transistors, inductors, capacitors, and varactors.
3. Connect the components to form an LC-tank oscillator with a feedback mechanism.
4. Define proper biasing to maintain steady-state operation.
5. Save and check the design for connectivity errors.

## 3.2 Simulation Setup

1. Open the **Analog Design Environment (ADE)** in Cadence.
2. Set up the **Transient Analysis** to observe time-domain behavior.
3. Configure the **AC Analysis** to study frequency response.
4. Use **Phase Noise Analysis** to evaluate noise performance.
5. Sweep the control voltage to analyze the **frequency tuning range**.
6. Run the simulations and examine the results for expected performance.

## 3.3 Transient Response

The transient response of the VCO shows how the oscillation builds up over time and stabilizes at a particular frequency.

- The output waveform should be a periodic sinusoidal or square wave depending on the circuit topology.
- The frequency of oscillation should match the theoretical calculations.
- The response time should indicate how quickly the circuit reaches steady-state operation.

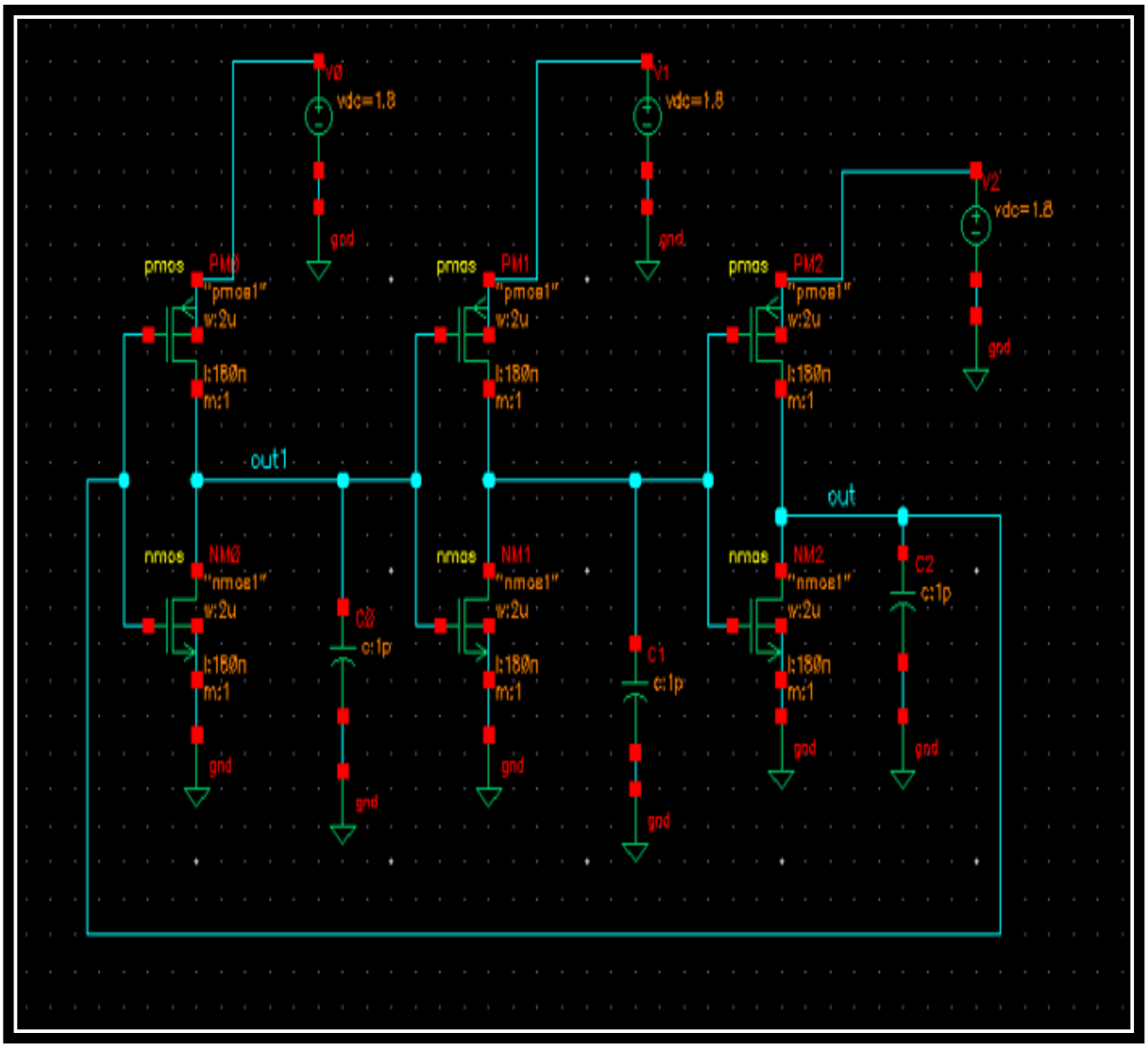


**Figure 3.1** Circuit of Voltage Controlled Oscillator

# 4. SIMULATION RESULTS

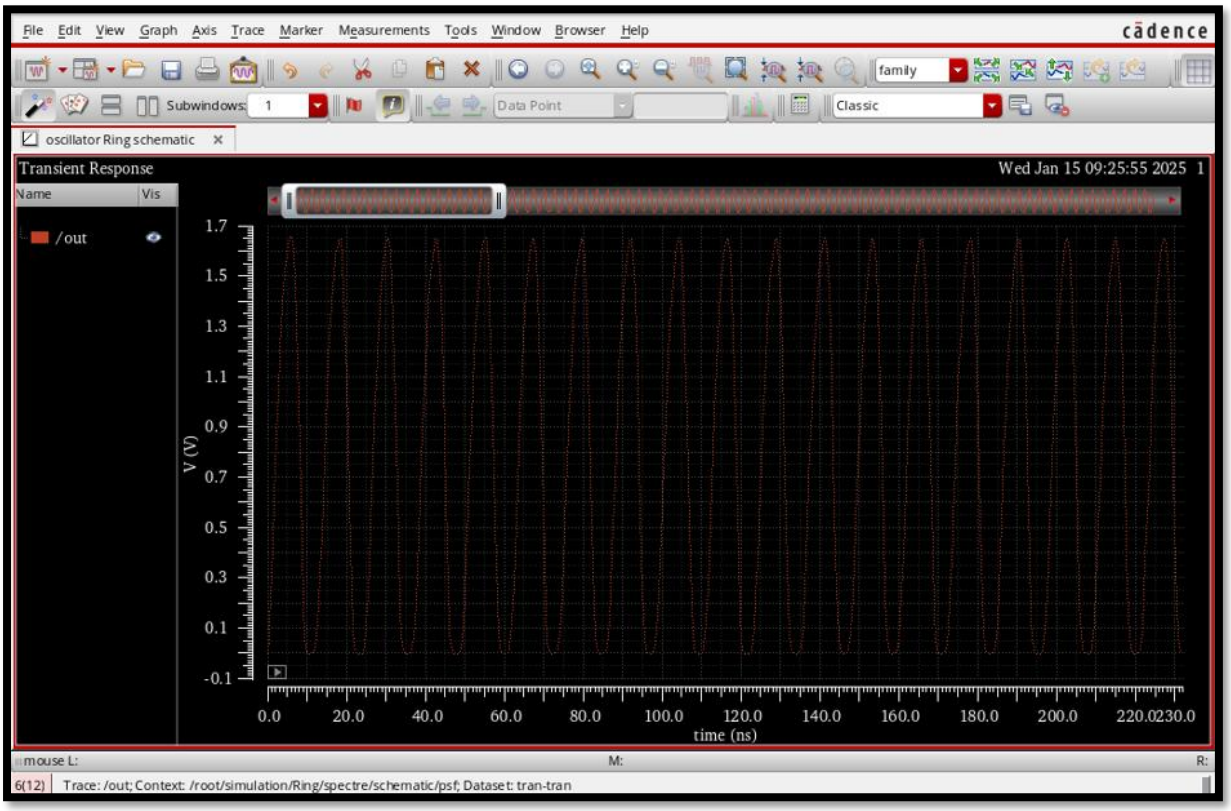


**Figure 4.1:** Simulation Results of Voltage Controlled Oscillator

# 5. ADVANTAGES AND DISADVANTAGES

## 5.1 Advantages:-

1. **Tunable Frequency:** Can be adjusted dynamically using a control voltage.
2. **Compact Design:** Implemented in integrated circuits with small area requirements.
3. **Essential in Communication Systems:** Used in frequency synthesis, modulation, and PLLs.
4. **Low Power Consumption:** Can be optimized for low-power applications.

## 5.2 Disadvantages:-

1. **Phase Noise:** Susceptible to noise, affecting signal integrity**.**
2. **Limited Frequency Range:** Depends on the design parameters and component values.
3. **Sensitivity to Variations:** Process variations and temperature changes impact stability.
4. **Complex Design Process:** Requires accurate modeling and simulations for optimization.

# 6. CONCLUSION

The design and analysis of a Voltage-Controlled Oscillator (VCO) using Cadence Virtuoso is an integral part of RF and analog circuit design. By carefully selecting design parameters and performing extensive simulations, an optimized VCO can be developed for various applications, including telecommunications, wireless networks, and medical instrumentation.

One of the major challenges in VCO design is minimizing phase noise, which directly affects signal quality and system performance. Proper circuit topology selection, high-quality passive components, and careful layout design can significantly improve phase noise characteristics. Additionally, process variations must be accounted for to ensure robust performance across different operating conditions.

Using Cadence Virtuoso, engineers can simulate and fine-tune VCO performance before fabrication, reducing design iterations and enhancing efficiency. By leveraging advanced simulation techniques, such as Monte Carlo analysis and corner simulations, designers can evaluate the impact of variations and optimize circuit robustness.

Ultimately, a well-designed VCO enhances the performance of modern electronic systems, providing a stable and tunable frequency source for applications that demand precision and reliability.

## 7. FREQUENTLY ASKED QUESTIONS (FAQs)

**Q1. What is the purpose of a VCO?**

**Answer:** A VCO generates an oscillating signal whose frequency is controlled by an input voltage, making it useful in communication systems and signal processing applications.

**Q2. What simulation tools are used in Cadence Virtuoso for VCO analysis?**

**Answer:** Spectre and HSPICE are commonly used simulation tools for analyzing frequency response, phase noise, and transient behavior.

**Q3. What are the key factors affecting VCO performance?**

**Answer:** Key factors include phase noise, frequency tuning range, power consumption, and stability under process variations.

**Q4. How can phase noise in a VCO be minimized?**

**Answer:** Using high-Q inductors, optimizing transistor sizing, and ensuring proper biasing techniques can help reduce phase noise.

**Q5. What is the difference between an LC-VCO and a ring oscillator VCO?**

**Answer:** An LC-VCO provides better phase noise performance but requires more area, while a ring oscillator VCO is compact and easier to integrate but has higher phase noise.